PRODIGY

3" ARCHITECTURAL FIRE-RATED ROUND FLANGE ADJUSTABLE

USE OF PRODUCT
Prodigy is an architectural fixture that is available in fixed, wall wash, or adjustable configurations. Meticulously engineered to offer an assortment of color temperatures, optics, filters, lumen outputs, and dimmable drivers. This series is suitable for residential and commercial applications in flange or flangeless appearance in an assortment of trim selections. May be utilized where fire-rating is required.

LED MODULE
Cree LEDs in static white or warm dim, in 90+ CRI, with 2-step binning which allows for color consistency between fixtures. Module may be interchangeable from downlight, wall wash, or adjustable by utilization of appropriate module holder. Module is accessible from below the ceiling.

ALIGNMENT/ADJUSTABILITY
- Collar notch allows for easy alignment between trims.
- Adjustable module may rotate 359° (horizontally) and tilt 35° (vertically), both positions may be locked.
- Adjustable module has dial indicator to determine tilt.

OPTICS AND FILTERS
Optical lens available in 18°, 30°, 35°, 40°, 50° and 70°. Easily achieve narrow spot to wide flood beam pattern. Optional frosted, honeycomb, or solite filter available upon request. Optics and filters are field-replaceable and are accessible from below the ceiling.

DIMMING
Intelligent Drive (ID) is the standard, all-inclusive driver which is Triac (120V), ELV (120V), and 0–10V (120V–277V). Optional driver selections include eldoLED. All drivers are accessible from below the ceiling.

THERMAL MANAGEMENT
Ambient temperature at fixture location should not exceed -20°C to 40°C.

TRIM
Die-cast trims are available in an assortment of finishes in round/square, flange/flangeless. Consult factory for made-to-order finishes. Flanged trim is compatible with all ceiling materials. Flangeless available for plaster ceilings. Frosted acrylic diffuser on trim is standard and allows it to meet wet location applications. Acrylic diffuser may be removed in the field. Wing bracket on trim accommodates for varying ceiling depths.

EMERGENCY BATTERY
Optional emergency battery (EM) available in 4W or 8W versions. Each provides light for a minimum of 90 minutes. EM back box (installed by factory) is required for the 4W version. 4W is accessible from below the ceiling. Ceiling access is required for the 8W version (test switch is remote). EM is UL 924 certified, CEC Title 20 approved, and provides sufficient lumens to comply with NFPA 101 safety code.

MOUNTING
Universal bar hanger (UH) is designed to mount to wood (two positions) and T-bar ceilings. UH may be adjusted vertically to accommodate varying ceiling depths.

NOTE
2-hour fire-rated ceiling assembly can be maintained when installed according to the International Building Code, Section 714. Metallic outlet boxes with metallic or non-metallic cover plates may be used in floor-ceiling and roof-ceiling assemblies with ratings not exceeding 2 hours. These assemblies should have gypsum board membranes. The metallic outlet boxes should be securely fastened to the joists and the opening in the gypsum board facing should be cut so that the clearance between the box and the gypsum board does not exceed ⅛". The surface area of individual boxes should not exceed 16 square inches. The aggregate surface area of the boxes should not exceed 100 square inches per 100 square feet of ceiling surface.

LABELS/COMPLIANCE/WARRANTY
- ETL (Intertek) Listed per UL 1598
- ETL (Intertek) Listed per UL514A (2-hour fire-rated metallic outlet box)
- Wet location rated.
- IC air-tight rated.
- Chicago Plenum rated.
- State of California Title 24 and JA8 compliant.
- 5-year limited warranty.

PATENT PENDING

GENERAL PERFORMANCE CHART

*Detailed performance chart may be found on page 2

	6W	9W	12W	15W
Initial Lumens	955	1296	1618	2015
Delivered Lumens	585-780	799-1065	1003-1345	1256-1668

* Values are listed at 3000K, 90+ CRI with trim.
Delivered lumens range based on beam spread.
Performance may vary +/- 5%

BEAM SPREAD

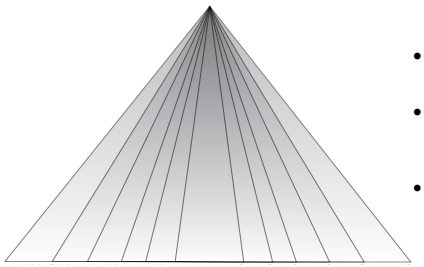

Available optics: 18˚ 30˚ 35˚ 40˚ 50˚ 70˚

- Field replaceable TIR optics
- Easily achieve narrow spot to wide flood beam pattern
- Optional filters available upon request

PRODIGY

3" ARCHITECTURAL FIRE-RATED ROUND FLANGE ADJUSTABLE

ORDERING INFORMATION

Series
RGY3

Wattage
6W - 6 Watt
9W - 9 Watt
12W - 12 Watt
15W - 15 Watt

Dimming
ID[1] **-** Standard All-Inclusive ELV(120V), Triac(120V), and 0-10V(120-277V) Dimming Driver (Intelligent Drive)
EEIS[2] **-** eldoLED 1% Dim 0–10V (120-127V), Triac (120V)
EDIO[3] **-** eldoLED 0.1% Dim (0–10V)
EDID[3] **-** eldoLED 0.1% Dim (DALI)
EDD[3] **-** eldoLED 1% Dim (DALI2)
PEQ0 - Lutron Hi-Lume Premier Ecosystem 0.1% with Soft-on, Fade-to-Black Dimming

Color Temperature
27K - 2700K
30K - 3000K
35K - 3500K
40K - 4000K

Optical Lens
18[4] - 18°
30 - 30°
35 - 35°
40 - 40°
50 - 50°
70 - 70°

Filter
None - Included
F - Frosted Filter
H - Honey Comb
S - Solite Filter

Housing Type
IC - IC Air-Tight New Construction

Collar
3CR - 3" Round Collar, 5/8" Height

Module Type
AMH - Adjustable

Frame Accessories
UH - Universal Adjustable Bar Hanger

Options
EI4WI - 4W Integral Emergency Battery with Integral Test Switch (400 lm)
ER8WR[5] - 8W Remote Emergency Battery with Remote Test Switch (800 lm)
CP - Chicago Plenum

TRIM ORDERING INFORMATION

Bevel / Flange Finish
3RFO**WW** - White Bevel / White Flange
3RFO**BB** - Black Bevel / Black Flange
3RFO**HW** - Haze Bevel / White Flange
3RFO**BZBZ** - Bronze Bevel / Bronze Flange
3RFO**MTO** - Made To Order

Notes
1. Intelligent Drive is the standard driver.
2. Programmable only in linear mode.
3. Must specify logarithmic or linear eldoLED diver.
4. 18° spread without lens on trim.
5. Ceiling access is required to replace the EM unit.

PERFORMANCE CHART

	Optics	[1]18°	30°	35°	40°	50°	70°
6W	Initial Lumens	955	955	955	955	955	955
	Delivered Lumens	780	712	766	746	705	585
	UGR	4.2	12.4	14	16	19.1	12.6
9W	Initial Lumens	1296	1296	1296	1296	1296	1296
	Delivered Lumens	1065	975	1047	999	962	799
	UGR	5.4	13.5	15.1	17.1	20.2	22.7
12W	Initial Lumens	1618	1618	1618	1618	1618	1618
	Delivered Lumens	1345	1234	1314	1262	1216	1003
	UGR	6.3	14.3	15.9	17.9	21	23.5
15W	Initial Lumens	2015	2015	2015	2015	2015	2015
	Delivered Lumens	1668	1494	1627	1579	1504	1256
	UGR	7.4	16.9	17.5	20.1	22.1	24.2

* Values are listed at 3000K, 90+ CRI with trim.

Notes
1. 18° spread without lens on trim

COLOR TEMPERATURE MULTIPLIER FOR DELIVERED LUMENS

2700K	3000K	3500K	4000K
0.95	1.00	1.04	1.07

Integer Lights continually works to improve products and reserves the right to make changes which may alter the performance, appearance or specification of products.

3RFO REGRESS FLANGE TRIM

- Listed IES files are with diffused lens

- Not suitable for wet locations
- Increase in lumens by approximately 7%

HOUSING DIMENSIONS

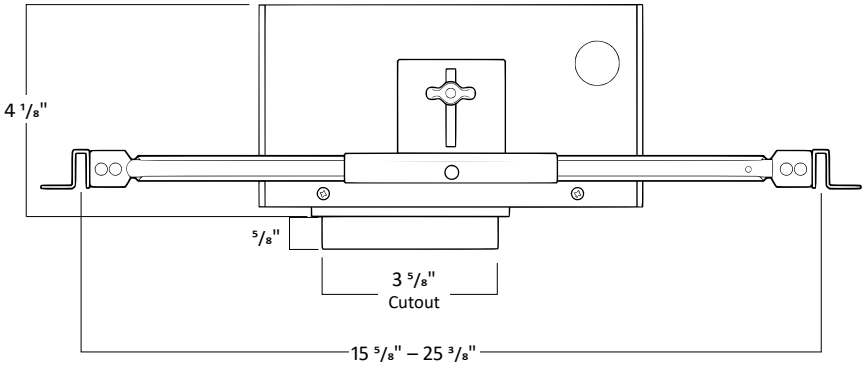

*Length modification available upon request

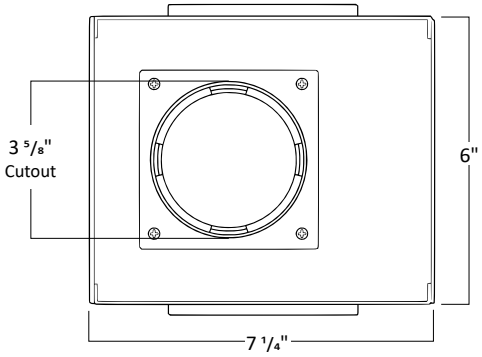

ADJUSTABLE MODULE DIMENSIONS

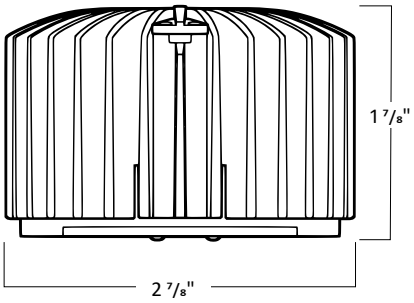

Heat Sink

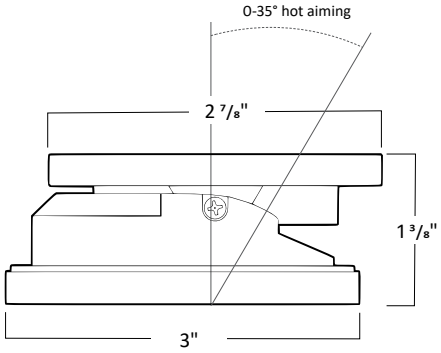

Adjustable Module Holder

FILTERS

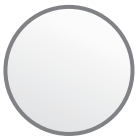

Frosted Filter

Honey Comb

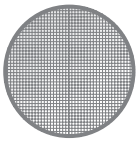

Solite Filter

TRIM DIMENSIONS

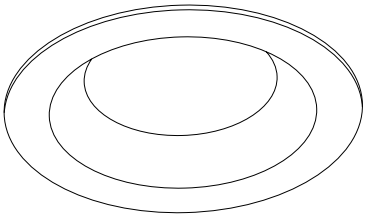

3RFO

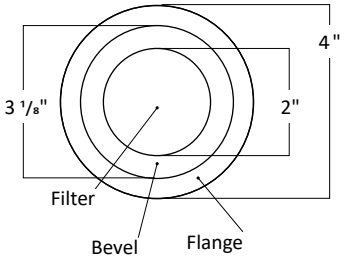

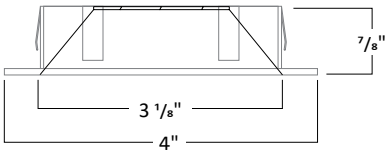

TRIM FINISH

White

Black

Haze

Bronze

*Consult Factory for Made to Order Finishes

INTEGRAL 4W EMERGENCY BATTERY

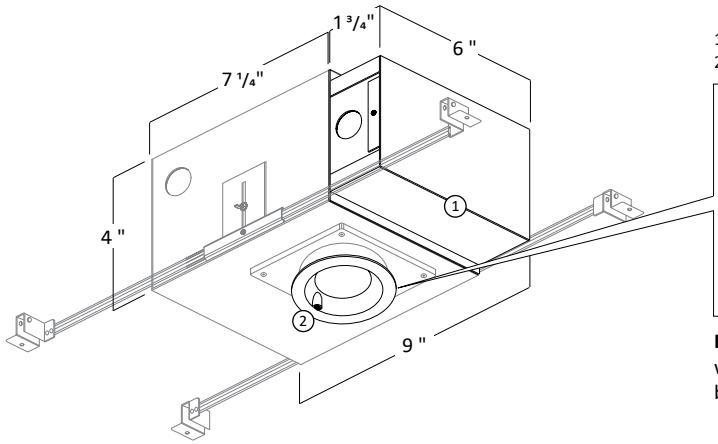

1. Integral Emergency Battery Compartment
2. Integral Test Switch

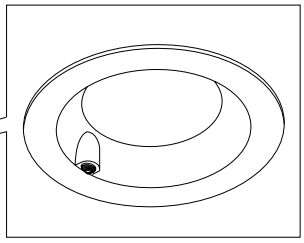

EI4WI is an 4W Emergency Battery that is integral to the fixture with an integral test switch. The EM unit is accessible from below the ceiling for replacement purposes.

REMOTE 8W EMERGENCY BATTERY

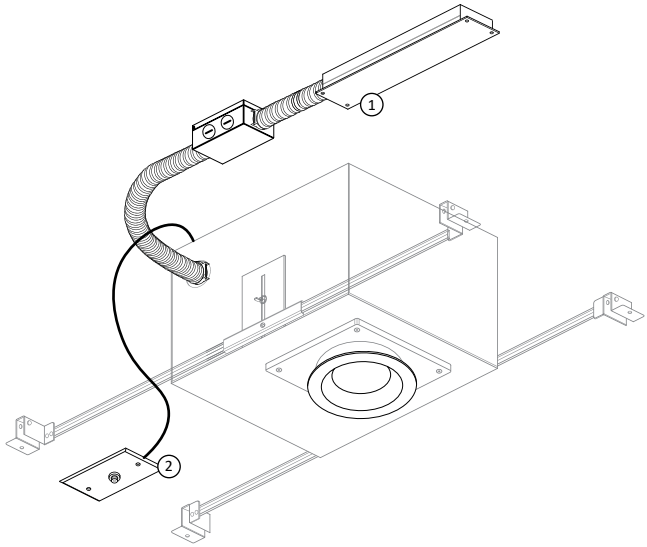

1. Remote Emergency Battery
2. Remote Test Switch

ER8WR is an 8W Emergency Battery that is remote to the fixture with a remote test switch. Ceiling access is required to replace the EM unit.

EMERGENCY BATTERY NOTICE

Emergency battery backup units are shipped in a partially discharged state. Upon receipt, fixtures should be installed and connected to a continuous, unswitched AC power source immediately and charged for a minimum of 24 hours before testing or emergency operation. Delayed installation or failure to charge the battery promptly may result in reduced battery capacity or premature battery failure and is not covered under warranty.

PRODIGY

3" ARCHITECTURAL FIRE-RATED ROUND FLANGE ADJUSTABLE

PHOTOMETRIC DATA

6W - 18° NO LENS

Throw Distance	Center Beam fc	Beam Width
6 ft	139	2.2 ft
8 ft	78	2.9 ft
10 ft	50	3.6 ft
12 ft	35	4.4 ft
14 ft	26	5.1 ft
16 ft	20	5.8 ft
18 ft	15	6.6 ft
20 ft	13	7.3 ft

Delivered Lumens : 780 lm
Efficiency : 118 lm/W

6W - 30°

Throw Distance	Center Beam fc	Beam Width
6 ft	63	3.0 ft
8 ft	36	4.1 ft
10 ft	23	5.1 ft
12 ft	16	6.1 ft
14 ft	12	7.1 ft
16 ft	9	8.2 ft
18 ft	7	9.2 ft
20 ft	6	10.2 ft

Delivered Lumens : 712 lm
Efficiency : 108 lm/W

6W - 35°

Throw Distance	Center Beam fc	Beam Width
6 ft	51	3.7 ft
8 ft	29	4.9 ft
10 ft	18	6.2 ft
12 ft	13	7.4 ft
14 ft	9	8.7 ft
16 ft	7	9.9 ft
18 ft	6	11.2 ft
20 ft	5	12.4 ft

Delivered Lumens : 766 lm
Efficiency : 116 lm/W

6W - 40°

Throw Distance	Center Beam fc	Beam Width
6 ft	36	4.6 ft
8 ft	20	6.1 ft
10 ft	13	7.6 ft
12 ft	9	9.2 ft
14 ft	7	10.7 ft
16 ft	5	12.2 ft
18 ft	4	13.8 ft
20 ft	3	15.3 ft

Delivered Lumens : 746 lm
Efficiency : 113 lm/W

6W - 50°

Throw Distance	Center Beam fc	Beam Width
6 ft	25	5.7 ft
8 ft	14	7.6 ft
10 ft	9	9.5 ft
12 ft	6	11.4 ft
14 ft	5	13.3 ft
16 ft	3	15.2 ft
18 ft	3	17.1 ft
20 ft	2	19.0 ft

Delivered Lumens : 705 lm
Efficiency : 107 lm/W

6W - 70°

Throw Distance	Center Beam fc	Beam Width
6 ft	13	8.2 ft
8 ft	7	10.9 ft
10 ft	5	13.6 ft
12 ft	3	16.4 ft
14 ft	2	19.1 ft
16 ft	2	21.8 ft
18 ft	1	24.6 ft
20 ft	1	27.3 ft

Delivered Lumens : 585 lm
Efficiency : 89 lm/W

9W - 18° NO LENS

Throw Distance	Center Beam fc	Beam Width
6 ft	190	2.2 ft
8 ft	107	2.9 ft
10 ft	68	3.6 ft
12 ft	47	4.4 ft
14 ft	35	5.1 ft
16 ft	27	5.8 ft
18 ft	21	6.6 ft
20 ft	17	7.3 ft

Delivered Lumens : 1065 lm
Efficiency : 116 lm/W

9W - 30°

Throw Distance	Center Beam fc	Beam Width
6 ft	86	3.0 ft
8 ft	49	4.1 ft
10 ft	31	5.1 ft
12 ft	22	6.1 ft
14 ft	16	7.2 ft
16 ft	12	8.2 ft
18 ft	10	9.2 ft
20 ft	8	10.3 ft

Delivered Lumens : 975 lm
Efficiency : 106 lm/W

9W - 35°

Throw Distance	Center Beam fc	Beam Width
6 ft	70	3.7 ft
8 ft	39	4.9 ft
10 ft	25	6.2 ft
12 ft	17	7.4 ft
14 ft	13	8.7 ft
16 ft	10	9.9 ft
18 ft	8	11.2 ft
20 ft	6	12.4 ft

Delivered Lumens : 1047 lm
Efficiency : 114 lm/W

9W - 40°

Throw Distance	Center Beam fc	Beam Width
6 ft	48	4.6 ft
8 ft	27	6.1 ft
10 ft	17	7.6 ft
12 ft	12	9.2 ft
14 ft	9	10.7 ft
16 ft	7	12.3 ft
18 ft	5	13.8 ft
20 ft	4	15.3 ft

Delivered Lumens : 999 lm
Efficiency : 109 lm/W

9W - 50°

Throw Distance	Center Beam fc	Beam Width
6 ft	34	5.7 ft
8 ft	19	7.6 ft
10 ft	12	9.5 ft
12 ft	8	11.4 ft
14 ft	6	13.3 ft
16 ft	5	15.2 ft
18 ft	4	17.1 ft
20 ft	3	19.0 ft

Delivered Lumens : 962 lm
Efficiency : 105 lm/W

9W - 70°

Throw Distance	Center Beam fc	Beam Width
6 ft	18	8.2 ft
8 ft	10	10.9 ft
10 ft	7	13.6 ft
12 ft	5	16.4 ft
14 ft	3	19.1 ft
16 ft	3	21.8 ft
18 ft	2	24.6 ft
20 ft	2	27.3 ft

Delivered Lumens : 799 lm
Efficiency : 87 lm/W

12W - 18° NO LENS

Throw Distance	Center Beam fc	Beam Width
6 ft	240	2.2 ft
8 ft	135	2.9 ft
10 ft	86	3.6 ft
12 ft	60	4.4 ft
14 ft	44	5.1 ft
16 ft	34	5.8 ft
18 ft	27	6.6 ft
20 ft	22	7.3 ft

Delivered Lumens : 1345 lm
Efficiency : 112 lm/W

12W - 30°

Throw Distance	Center Beam fc	Beam Width
6 ft	109	3.0 ft
8 ft	61	4.1 ft
10 ft	39	5.1 ft
12 ft	27	6.1 ft
14 ft	20	7.2 ft
16 ft	15	8.2 ft
18 ft	12	9.2 ft
20 ft	10	10.2 ft

Delivered Lumens : 1234 lm
Efficiency : 103 lm/W

12W - 35°

Throw Distance	Center Beam fc	Beam Width
6 ft	87	3.7 ft
8 ft	49	5.0 ft
10 ft	31	6.2 ft
12 ft	22	7.5 ft
14 ft	16	8.7 ft
16 ft	12	10.0 ft
18 ft	10	11.2 ft
20 ft	8	12.5 ft

Delivered Lumens : 1314 lm
Efficiency : 110 lm/W

12W - 40°

Throw Distance	Center Beam fc	Beam Width
6 ft	61	4.6 ft
8 ft	34	6.1 ft
10 ft	22	7.6 ft
12 ft	15	9.2 ft
14 ft	11	10.7 ft
16 ft	9	12.3 ft
18 ft	7	13.8 ft
20 ft	5	15.3 ft

Delivered Lumens : 1262 lm
Efficiency : 105 lm/W

12W - 50°

Throw Distance	Center Beam fc	Beam Width
6 ft	43	5.7 ft
8 ft	24	7.6 ft
10 ft	15	9.5 ft
12 ft	11	11.4 ft
14 ft	8	13.3 ft
16 ft	6	15.2 ft
18 ft	5	17.1 ft
20 ft	4	19.0 ft

Delivered Lumens : 1216 lm
Efficiency : 101 lm/W

12W - 70°

Throw Distance	Center Beam fc	Beam Width
6 ft	23	8.2 ft
8 ft	13	10.9 ft
10 ft	8	13.6 ft
12 ft	6	16.4 ft
14 ft	4	19.1 ft
16 ft	3	21.8 ft
18 ft	3	24.6 ft
20 ft	2	27.3 ft

Delivered Lumens : 1003 lm
Efficiency : 84 lm/W

15W - 18° NO LENS

Throw Distance	Center Beam fc	Beam Width
6 ft	296	2.2 ft
8 ft	167	2.9 ft
10 ft	107	3.6 ft
12 ft	74	4.4 ft
14 ft	54	5.1 ft
16 ft	42	5.9 ft
18 ft	33	6.6 ft
22 ft	22	8.1 ft

Delivered Lumens : 1668 lm
Efficiency : 109 lm/W

15W - 30°

Throw Distance	Center Beam fc	Beam Width
6 ft	121	3.1 ft
8 ft	68	4.2 ft
10 ft	44	5.2 ft
12 ft	30	6.3 ft
14 ft	22	7.3 ft
16 ft	17	8.4 ft
18 ft	13	9.4 ft
20 ft	11	10.5 ft

Delivered Lumens : 1494 lm
Efficiency : 98 lm/W

15W - 35°

Throw Distance	Center Beam fc	Beam Width
6 ft	107	3.7 ft
8 ft	60	4.9 ft
10 ft	39	6.2 ft
12 ft	27	7.4 ft
14 ft	20	8.7 ft
16 ft	15	9.9 ft
18 ft	12	11.2 ft
20 ft	10	12.4 ft

Delivered Lumens : 1627 lm
Efficiency : 106 lm/W

15W - 40°

Throw Distance	Center Beam fc	Beam Width
6 ft	74	4.6 ft
8 ft	42	6.2 ft
10 ft	27	7.7 ft
12 ft	19	9.3 ft
14 ft	14	10.8 ft
16 ft	10	12.4 ft
18 ft	8	14.0 ft
20 ft	7	15.5 ft

Delivered Lumens : 1579 lm
Efficiency : 103 lm/W

15W - 50°

Throw Distance	Center Beam fc	Beam Width
6 ft	53	5.6 ft
8 ft	30	7.5 ft
10 ft	19	9.3 ft
12 ft	13	11.2 ft
14 ft	10	13.1 ft
16 ft	8	15.0 ft
18 ft	6	16.9 ft
20 ft	5	18.7 ft

Delivered Lumens : 1504 lm
Efficiency : 98 lm/W

15W - 70°

Throw Distance	Center Beam fc	Beam Width
6 ft	28	8.3 ft
8 ft	16	11.1 ft
10 ft	10	13.9 ft
12 ft	7	16.7 ft
14 ft	5	19.5 ft
16 ft	4	22.3 ft
18 ft	3	25.1 ft
20 ft	3	27.9 ft

Delivered Lumens : 1256 lm
Efficiency : 82 lm/W

Integer Lights continually works to improve products and reserves the right to make changes which may alter the performance, appearance or specification of products.